ENGINE, CRANKCASE - Z26S4D92AN/AH/BN/BH (C750270)

2026 RZR - RZR PRO S4 ULTIMATE (R01) - Z26S4D92AN/AH/BN/BH

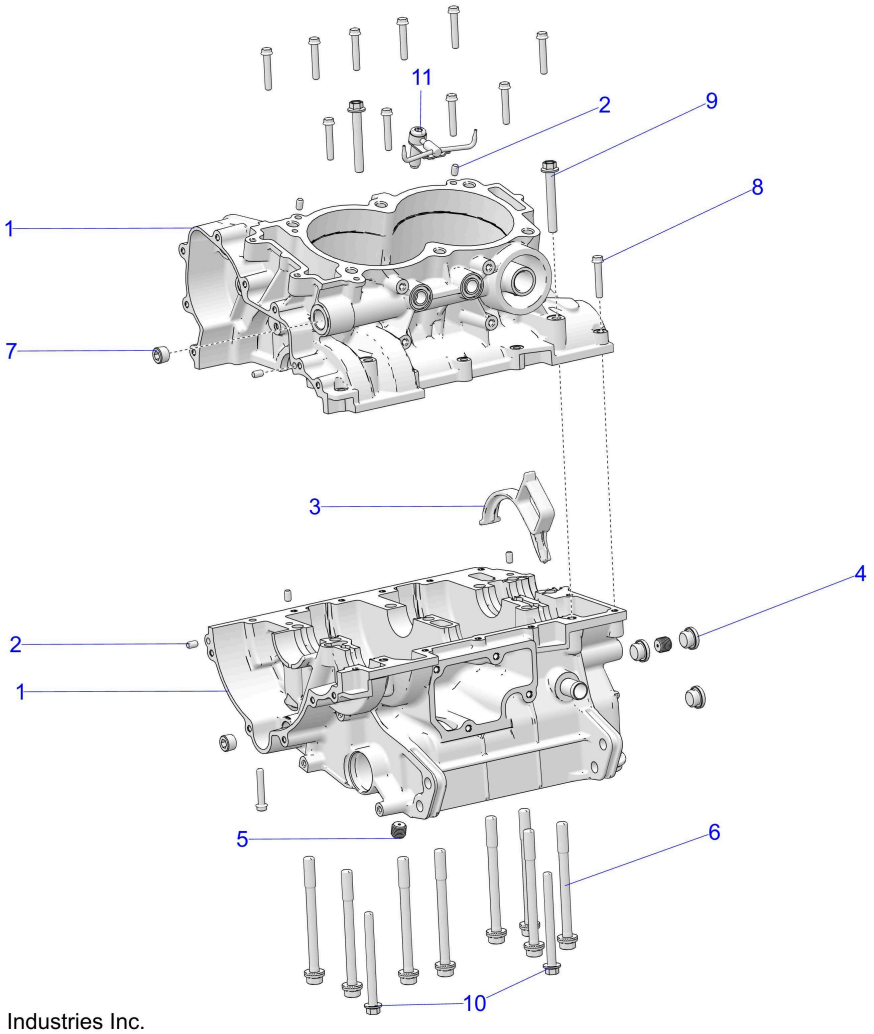

© 2023 Polaris Industries Inc.

C750270

Reference #	*Part#*	*Description*	*Quantity*
1	1205772	KIT, CRANKCASE [INCL. 2-7]	1
2	5136879	PIN-DOWEL,M6X10	8
3	5452616	DIVERTER, OIL DRAIN	1
4	7052642	PLUG-HEX SCKT,W/O-RING,M16X1.5	3
5	7518835	PLUG-HEX SOCKET,1/4X18,SEALANT	2
6	7521267	SCR-HXFL,M10X1.25X113MM 10.9	8
7	7052413	PLUG-3/8 NPT,HX/SOC W/SEALANT	2
8	7518578	SCR-HXFL-M6X1.0X35 8.8 ZY3	12
9	7519186	SCR-HXFLG,M8X1.25X60	2
10	7519154	SCR-HXFLG,M8X1.25X90	2
11	3022856	JET, PISTON	1

Copyright 1996-2026 Polaris Industries U.S.A All rights reserved.